NOTES:

1 - MEDIA SUPPLY PORT IS COMPLIANT WITH ISO 228 & ISO 1179. RECOMMENDED FITTING TIGHTENING TORQUE IS 15 Nm.

2 - DRAIN PORT THREAD DEPTH IS SHORTER THAN REQUIREMENT FOR A STANDARD FITTING. DRAIN FITTING THREAD LENGTH CAN NOT EXCEED 8 mm.

H 3 - 2X CLAMP & 2X SCREW M6×12 SUPPLIED BY DEUBLIN.

CONFIDENTIAL
THIS DOCUMENT CONTAINS CONFIDENTIAL AND PROPRIETARY INFORMATION OF DEUBLIN COMPANY. COPYING, USE, TRANSMISSION, DISTRIBUTION, AND DISCLOSURE ARE SUBJECT TO THE TERMS AND CONDITIONS CONTAINED IN YOUR AGREEMENT WITH DEUBLIN COMPANY. ALL RIGHTS RESERVED.

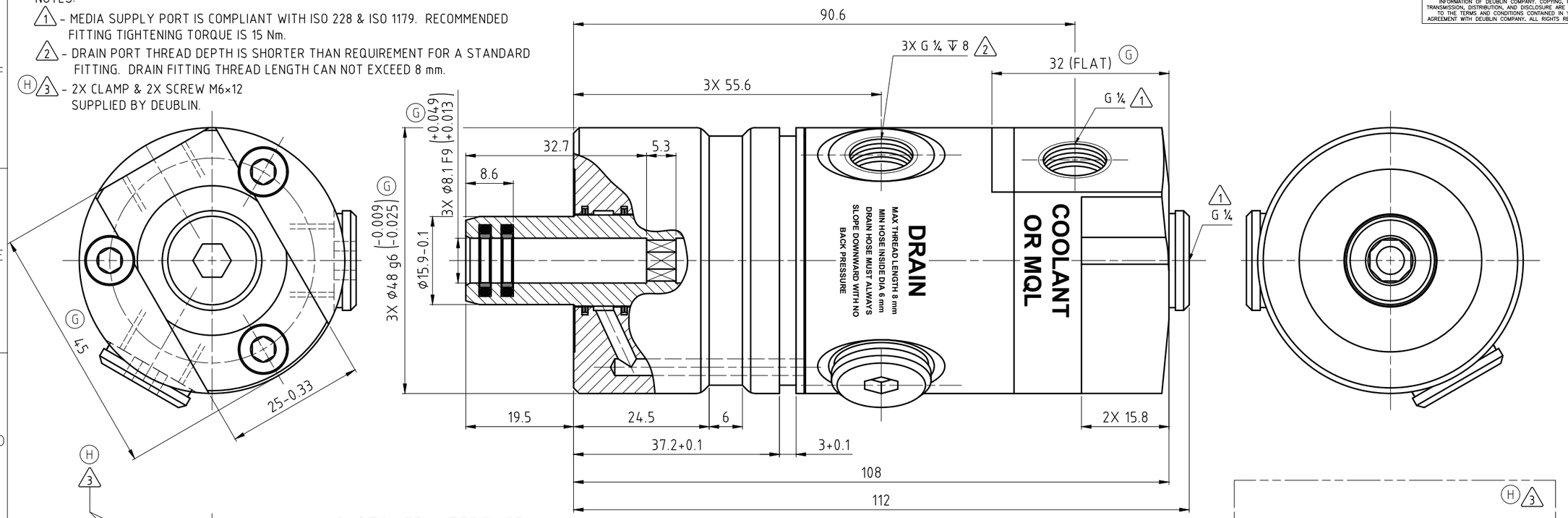

CUSTOMER INTERFACE

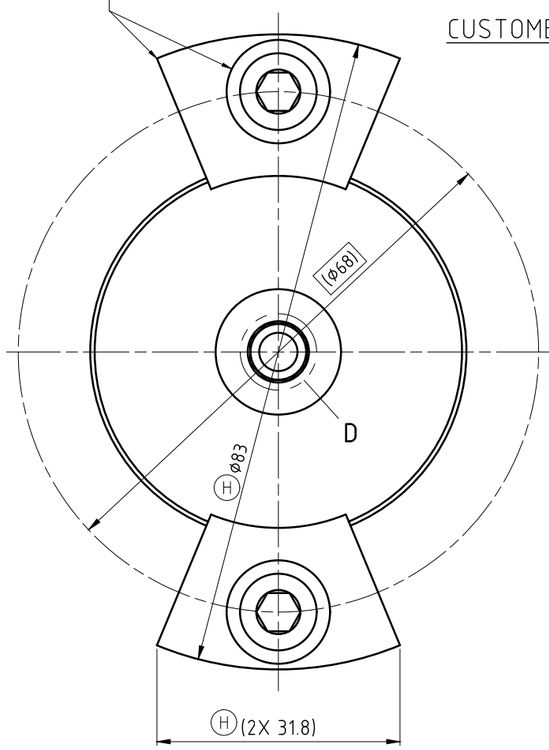

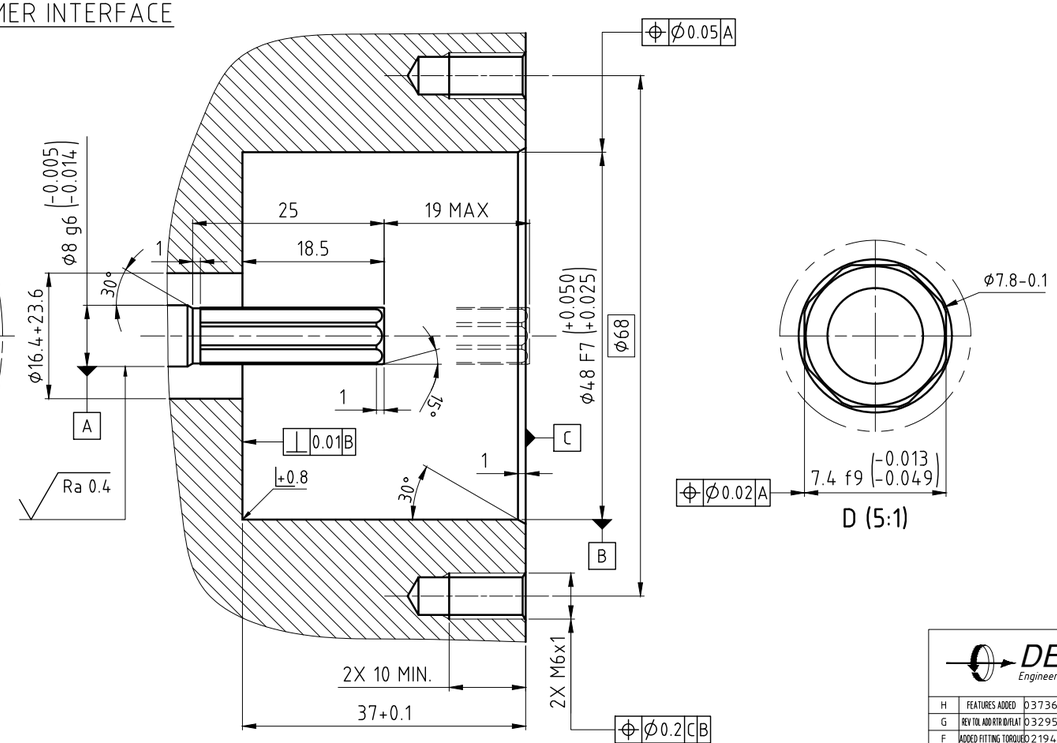

OPERATING DATA

MEDIA		COOLANT	MQL
MEDIA PRESSURE	MAXIMUM	150 bar	10 bar
	MINIMUM	1 bar	1 bar
FLOW RATE	MAXIMUM	24.3 L/min	1128 NL/min
	MINIMUM	1 L/min	160 NL/min
TEMPERATURE	MAXIMUM	70 °C	70 °C
	MINIMUM	5 °C	5 °C
MAXIMUM SPEED		24000 min^{-1}	24000 min^{-1}
AXIAL FORCE		5.02 N/bar	
DRY RUN		UNPRESSURIZED ONLY	
RECOMMENDED FILTRATION		ISO 4406 CLASS 17/15/12	

DEUBLIN® Engineered for Performance

PROJECTION:

SCALE: 2:1

MATERIAL: INTERFACE CONTROL DRAWING

ISSUE	MODIFICATION	ECO	DATE	SIGN
H	FEATURES ADDED	037362	04/16	FD
G	REV TOL ADD RTR ID/FLAT	032957	04/15	RA
F	ADDED FITTING TORQUE	021944	02/13	AL
E	CHANGED FORCE VALUE	018652	08/12	AL
D	CORRECTED DATUM	018249	05/12	AL
C	MAX PRESSURE WAS 14 MPa	018142	05/12	AL

	DATE	NAME
DRN.	02/19/2009	LG
ENGR.		
APPD.		

UNLESS SPECIFICALLY TOLERANCED, ALL DIMENSIONS ARE CONSIDERED REFERENCE

TITLE: DEUBLIN UNION, POP OFF, 24k/min BORE-MOUNTED

NO. 1109-840-835

SHEET A2