NOTES:

1 - SLIP RING RATED: IP-54.

2 - HARTING 09 30 010 0301 HOUSING. (A)

3 - HARTING 09 30 010 0313 FRAME.

4 - HARTING 09 14 012 3001 12-PIN MODULES (3X).

5 - 16AWG 12 CONDUCTOR POWER CABLE.

6 - 24AWG 3 PAIR SHIELDED SIGNAL CABLE.

7 - 24AWG 5 PAIR SHIELDED SIGNAL CABLE.

8 - 8 POSITION 16-26AWG WAGO 734-468 TERMINAL STRIP.

9 - 10 POSITION 16-26AWG WAGO 734-470 TERMINAL STRIP.

10 - 12 POSITION 16-26AWG WAGO 722-142 TERMINAL STRIP.

11 - ANTI-ROTATION DEVICE.

12 - M6x1 X 30 LONG ISO 4762 (4X).

13 - THIS PRODUCT FOR EXCLUSIVE USE IN WIND TURBINES. (B)

CONFIDENTIAL
THIS DOCUMENT CONTAINS CONFIDENTIAL AND PROPRIETARY INFORMATION OF DEUBLIN COMPANY. COPYING, USE, TRANSMISSION, DISTRIBUTION, AND DISCLOSURE ARE SUBJECT TO THE TERMS AND CONDITIONS CONTAINED IN YOUR AGREEMENT WITH DEUBLIN COMPANY. ALL RIGHTS RESERVED.

TERMINAL BLOCK	POS.	HOUSING MODULE	POS.
TB1 POWER (10)	1	a (4)	1
	2		2
	3		3
	4		4
	5		5
	6		6
	7		7
	8		8
	9		9
	10		10
	11	PE	PE
TB1 NOT USED	12	a NOT USED	12

TERMINAL BLOCK	POS.	HOUSING MODULE	POS.
TB2 SIGNAL (8)	1	b (4)	1
	2		2
	3		3
	4		4
	5		5
	6		6
TB2 NOT USED	7	b NOT USED	7
	8		8
			9
			10
			11
			12

TERMINAL BLOCK	POS.	HOUSING MODULE	POS.
TB3 SIGNAL (9)	1	c (4)	1
	2		2
	3		3
	4		4
	5		5
	6		6
	7		7
	8		8
	9		9
	10		10
		c NOT USED	11
			12

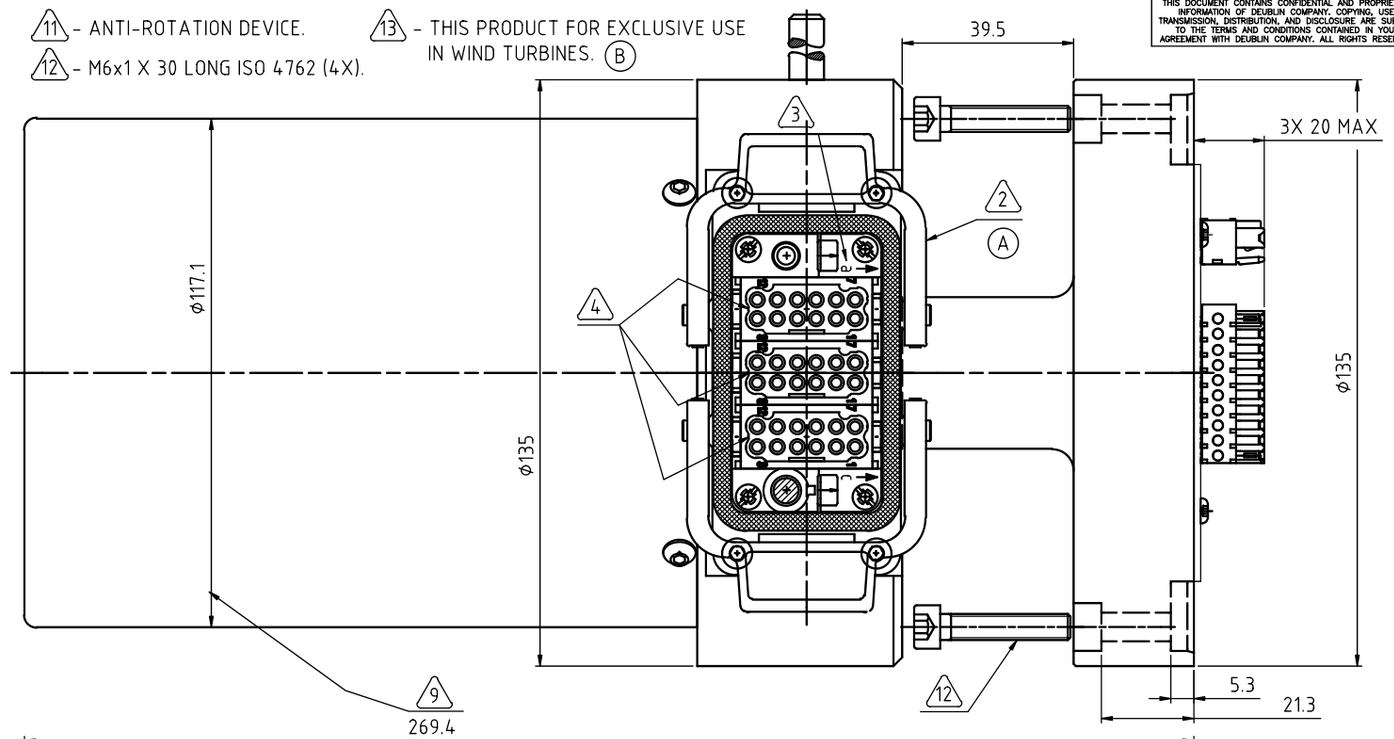

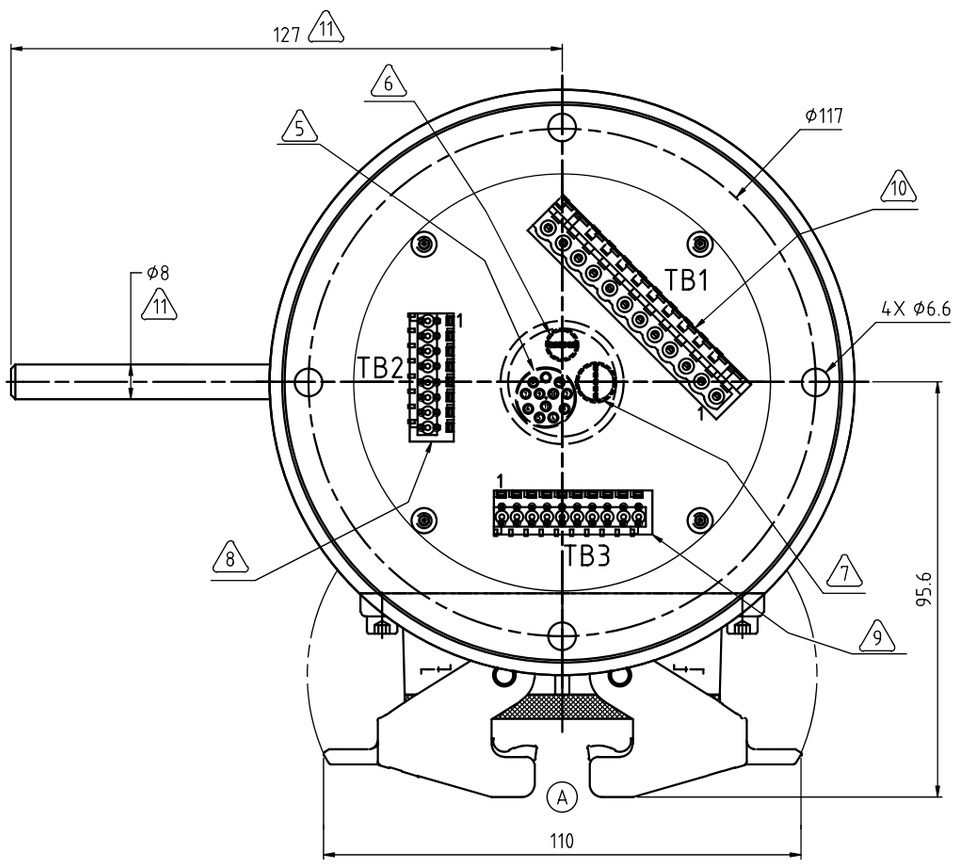

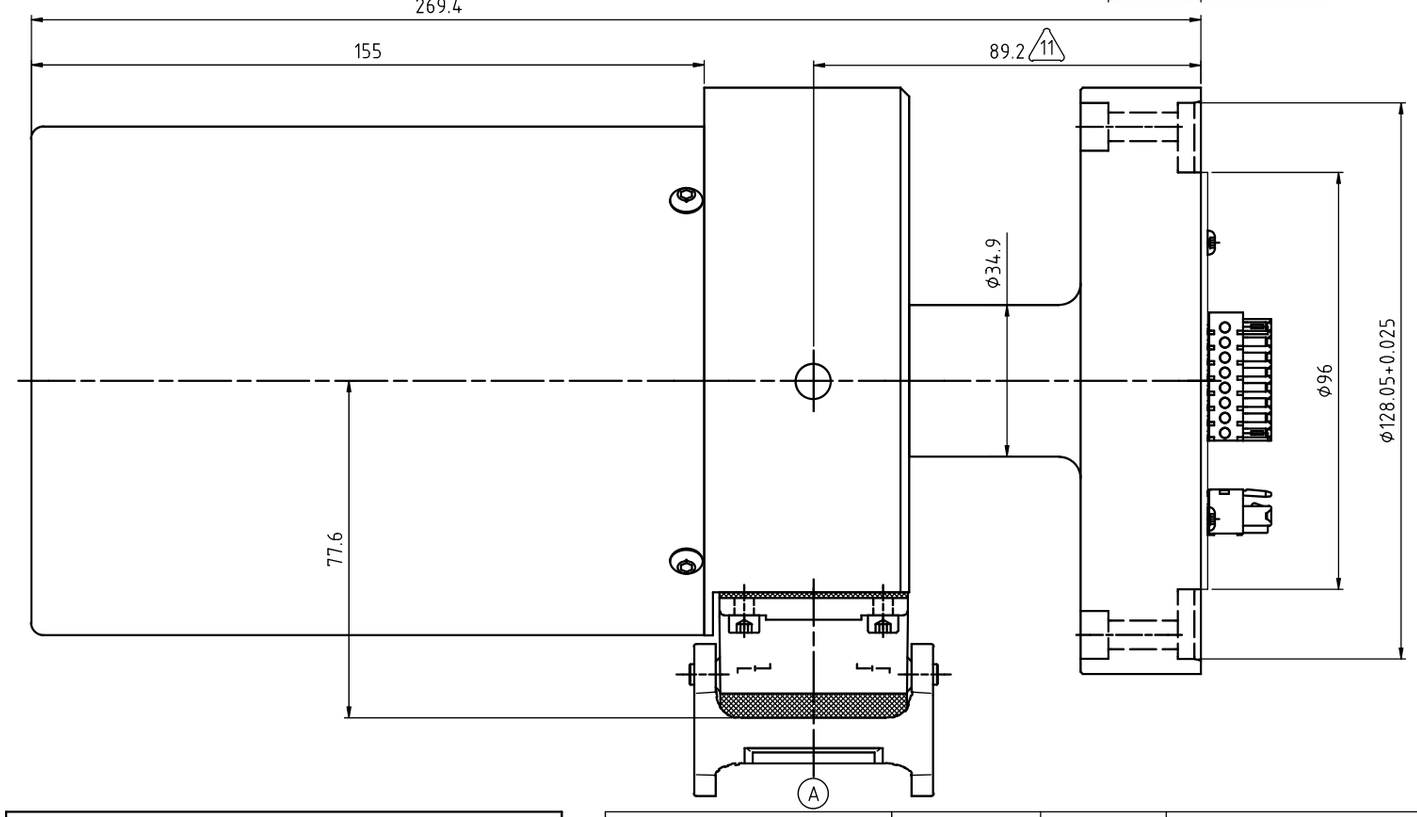

SLIP RING OPERATING PARAMETERS				
CHANNEL	RATED VOLTAGE	RATED CURRENT	TEMPERATURE RANGE	RATED SPEED
1 - 11	48VDC	10A	-20° C TO +80° C	100 RPM
12 - 27	48VDC	2A	-20° C TO +80° C	100 RPM

DEUBLIN® Engineered for Performance

PROJECTION:

SCALE: 1:1

MATERIAL: INTERFACE CONTROL DRAWING

TITLE: SLIP RING, 27 CHANNEL UNION MOUNTING (13)

NO. SR0034-IC

SHEET A2

	DATE	NAME
DRN.	10/04/2013	MLP
ENGR.	10/04/2013	MLP / EL
APPD.		

ISSUE	MODIFICATION	ECO	DATE	SIGN
B	NOTE 13 ADDED	033379	06/15	WAY
A	WAS HARTING 09 30 010 0305	030046	09/14	JRE
NONE	INITIAL RELEASE	025110	10/13	MLP

UNLESS SPECIFICALLY TOLERANCED, ALL DIMENSIONS ARE CONSIDERED REFERENCE