CONFIDENTIAL
THIS DOCUMENT CONTAINS CONFIDENTIAL AND PROPRIETARY INFORMATION OF DEUBLIN COMPANY. COPYING, USE, TRANSMISSION, DISTRIBUTION, AND DISCLOSURE ARE SUBJECT TO THE TERMS AND CONDITIONS CONTAINED IN YOUR AGREEMENT WITH DEUBLIN COMPANY. ALL RIGHTS RESERVED.

NOTES:

1. FLOATING SEAL ASSEMBLY ACTUATION DISTANCE.
2. AIR FUNCTIONS IN A CONTROLLED LEAKAGE CONDITION.
3. ACCEPTABLE ANGULAR MIS-ALIGNMENT FROM PIVOT POINT AT ANY MOUNTING DISTANCE.
4. AIR ACTUATION PORT FOR MEDIA VACUUM DRAWBACK. UNION ACTUATION PORT MUST BE ALIGNED CORRECTLY WITH MACHINE ACTUATION PORT.
5. AIR ACTUATION PORT PRESSURIZATION DURING ROTATION WITH DRY AIR THROUGH THE MEDIA CHANNEL CAUSES PREMATURE WEAR OF THE SEAL.
6. ROTOR TO BE INSTALLED USING A SOCKET WRENCH OR BOX END WRENCH ONLY. WHEN USING SOCKET WRENCH CARE MUST BE TAKEN TO NOT CONTACT SEAL FACE. TORQUE ROTOR TO 15 N-m + 2 N-m.
7. JACKING SCREW HOLE FOR UNION REMOVAL.

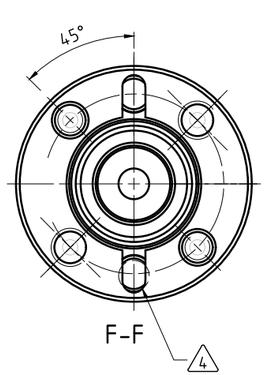


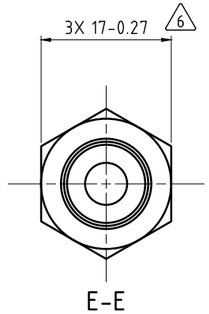


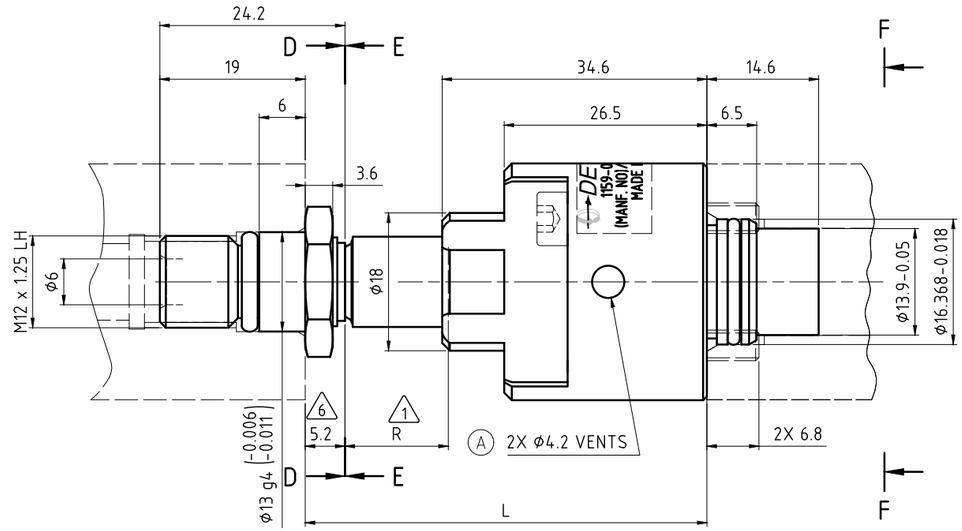


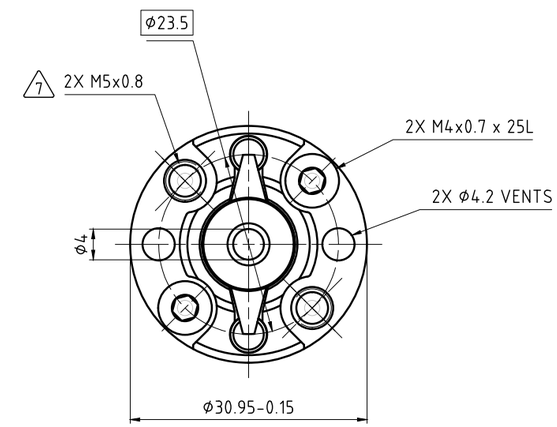


D-D

| MOUNTING DIMENSION 'L' | ACTUATION DISTANCE 'R' |
|---|---|
| 52.5 mm | 13.5 mm |
| 48.0 mm | 9 mm |
| 43.5 mm | 4.5 mm |
| 39.0 mm | 0 mm |

CUSTOMER INTERFACE

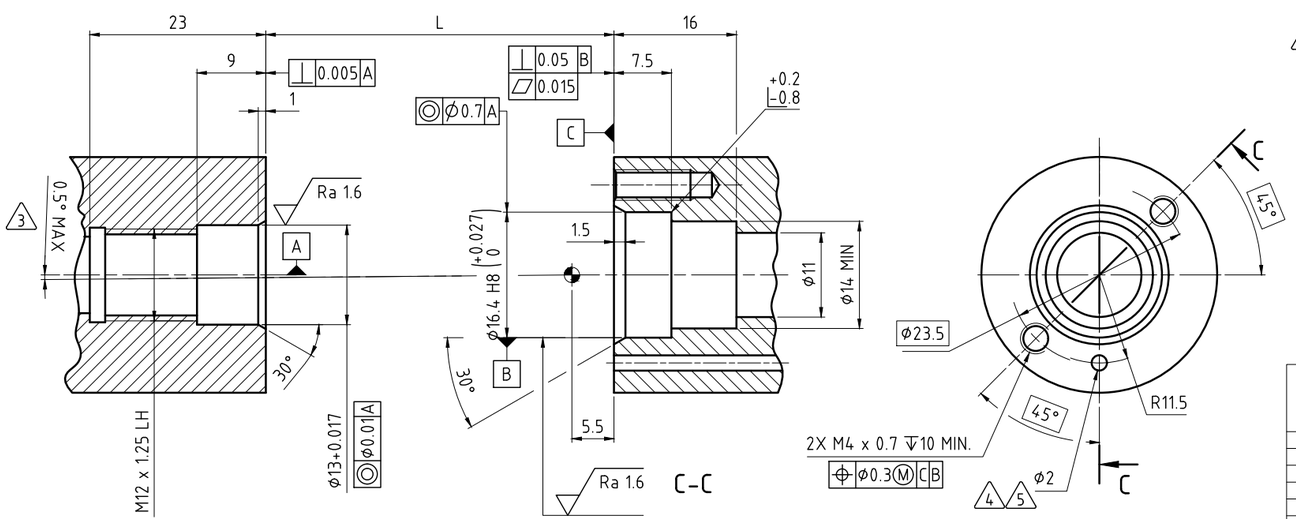


| OPERATING DATA | | | | |
|---|---|---|---|---|
| MEDIA | | COOLANT | 2 AIR OR MQL | VACUUM |
| 4 AIR ACTUATION PORT PRESSURE | MAXIMUM | 0 bar | 0 bar | 6 bar |
| | MINIMUM | - | - | 3 bar |
| MEDIA PRESSURE | MAXIMUM | 210 bar | 10 bar | - |
| | MINIMUM | 1.5 bar | 3 bar | - |
| FLOW RATE | MAXIMUM | 33 L/min | 1580 NL/min | - |
| | MINIMUM | 10 L/min | 480 NL/min | - |
| TEMPERATURE | MAXIMUM | 70 °C | 70 °C | 70 °C |
| | MINIMUM | 5 °C | 5 °C | 5 °C |
| MAXIMUM SPEED | | 50000 $min^{-1}$ | 50000 $min^{-1}$ | 0 $min^{-1}$ |
| AXIAL FORCE | | 5.1 N/bar (357 N/7 MPa) | | |
| DRY RUN | | UNLIMITED | UNLIMITED | NOT POSSIBLE |
| RECOMMENDED FILTRATION | | ISO 4406 CLASS 17/15/12 | | |

DEUBLIN® Engineered for Performance

PROJECTION:

| | DATE | NAME |
|---|---|---|
| DRN. | 04/06/2015 | lgalindo |
| ENGR. | 04/06/2015 | mclifford |
| APPD. | | |

| ISSUE | MODIFICATION | ECO | DATE | SIGN |
|---|---|---|---|---|
| A | MOVED VENT OVER | 033464 | 06/15 | LG |

UNLESS SPECIFICALLY TOLERANCED, ALL DIMENSIONS ARE CONSIDERED REFERENCE

SCALE: 2:1

MATERIAL: INTERFACE CONTROL DRAWING

TITLE: DEUBLIN BEARINGLESS UNION, M12 x 1.25 LH ROTOR

NO. 1159-135-103

SHEET A2