NOTES:

1 - CONTACT DEUBLIN OR VISIT WWW.DEUBLIN.COM
FOR INSTRUCTION MANUAL: 040-553

2 - SPINDLE BEARING ARRANGEMENT

3 - ROUNDED

4 - 2X PIPE PLUG G 1/4

CONFIDENTIAL
THIS DOCUMENT CONTAINS CONFIDENTIAL AND PROPRIETARY INFORMATION OF DEUBLIN COMPANY. COPYING, USE, TRANSMISSION, DISTRIBUTION, AND DISCLOSURE ARE SUBJECT TO THE TERMS AND CONDITIONS CONTAINED IN YOUR AGREEMENT WITH DEUBLIN COMPANY. ALL RIGHTS RESERVED.

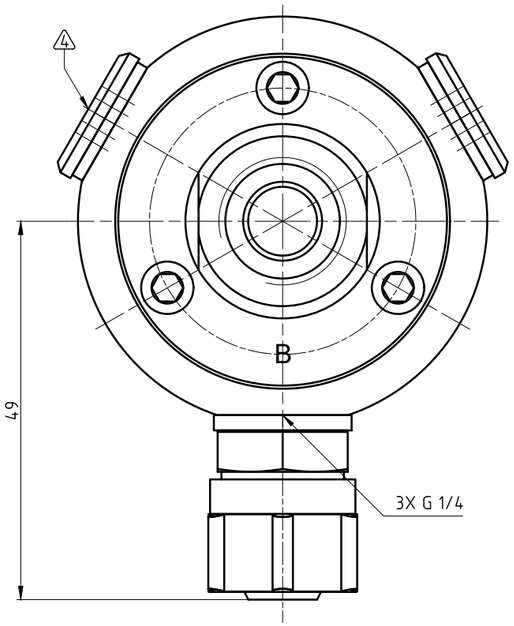

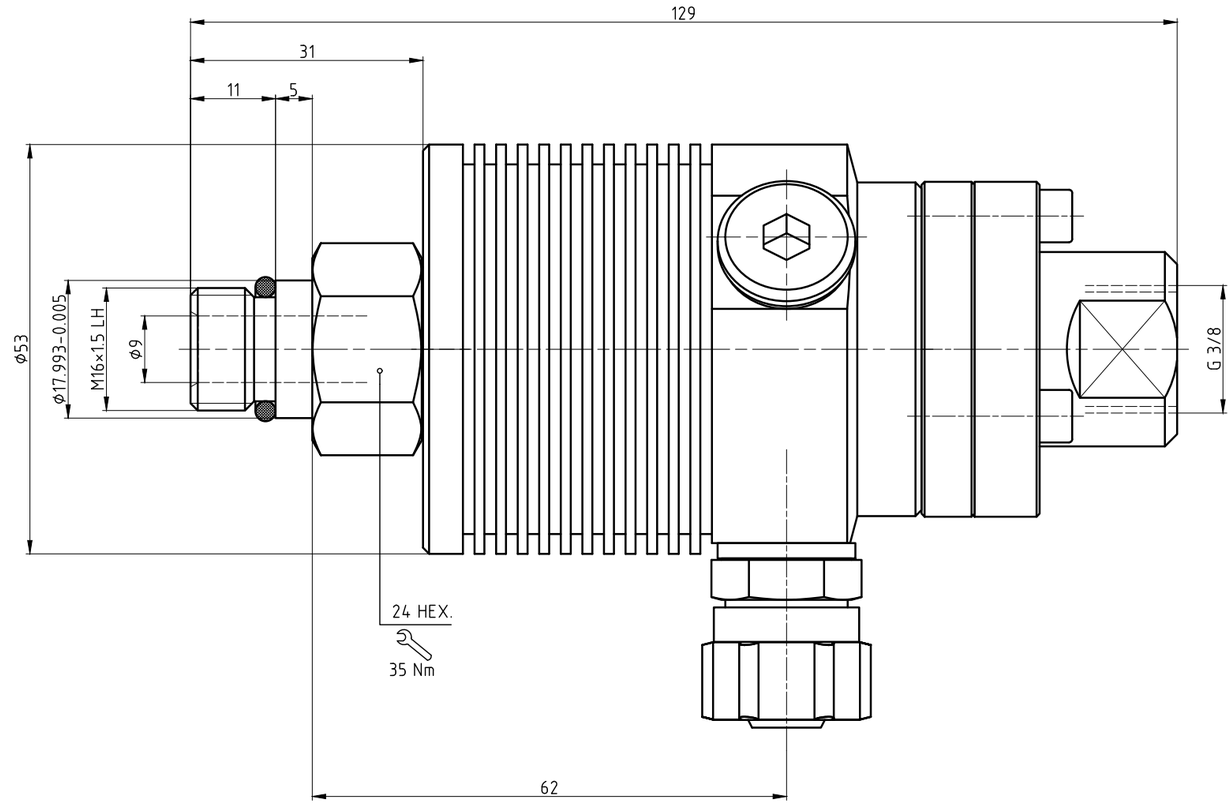

CUSTOMER's INTERFACE

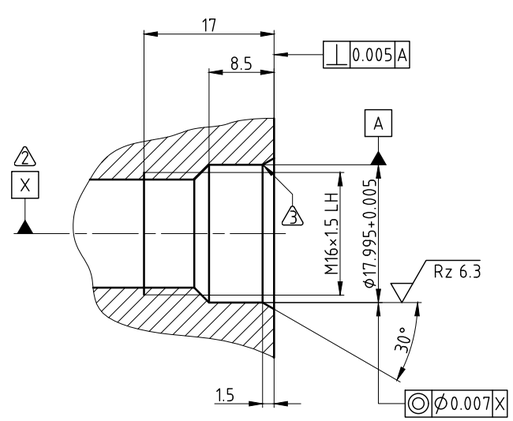

OPERATING DATA		
MEDIA	COOLANT	MQL
PRESSURE MAX.	105 bar	10 bar
SPEED MAX.	20000 min^{-1}	20000 min^{-1}
TEMPERATURE MAX.	70 °C	70 °C
FLOW RATE MAX.	22 l/min	681 Nl/min
DRY RUN	UNLIMITED	

DEUBLIN® Engineered for Performance

PROJECTION:

SCALE: 2:1

MATERIAL: INTERFACE CONTROL DRAWING

	DATE	NAME
DRN.	26.01.2012	CW
ENGR.	26.01.2012	FD
APPD.		

UNLESS SPECIFICALLY TOLERANCED, ALL DIMENSIONS ARE CONSIDERED REFERENCE

ISSUE	MODIFICATION	ECO	DATE	SIGN

TITLE: DEUBLIN ROTATING UNION
DEUBLIN Drehdurchführung

NO. 1109-038-188

SHEET A2