CONFIDENTIAL
THIS DOCUMENT CONTAINS CONFIDENTIAL AND PROPRIETARY INFORMATION OF DEUBLIN COMPANY. COPYING, USE, TRANSMISSION, DISTRIBUTION, AND DISCLOSURE ARE SUBJECT TO THE TERMS AND CONDITIONS CONTAINED IN YOUR AGREEMENT WITH DEUBLIN COMPANY. ALL RIGHTS RESERVED.

NOTES:

1. SPINDLE BEARING ARRANGEMENT
2. ROUNDED
3. 3X SCREW M5×40
4. TORQUE TO 35 Nm
5. PLUG INSTALLED HAND TIGHT FROM FACTORY. IF PORT IS NOT UTILIZED, TIGHTEN BEFORE USE.

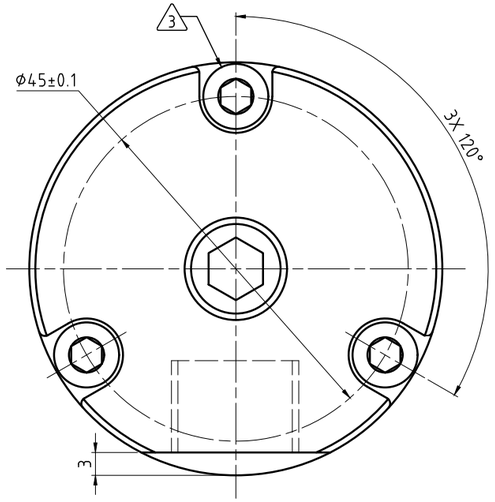

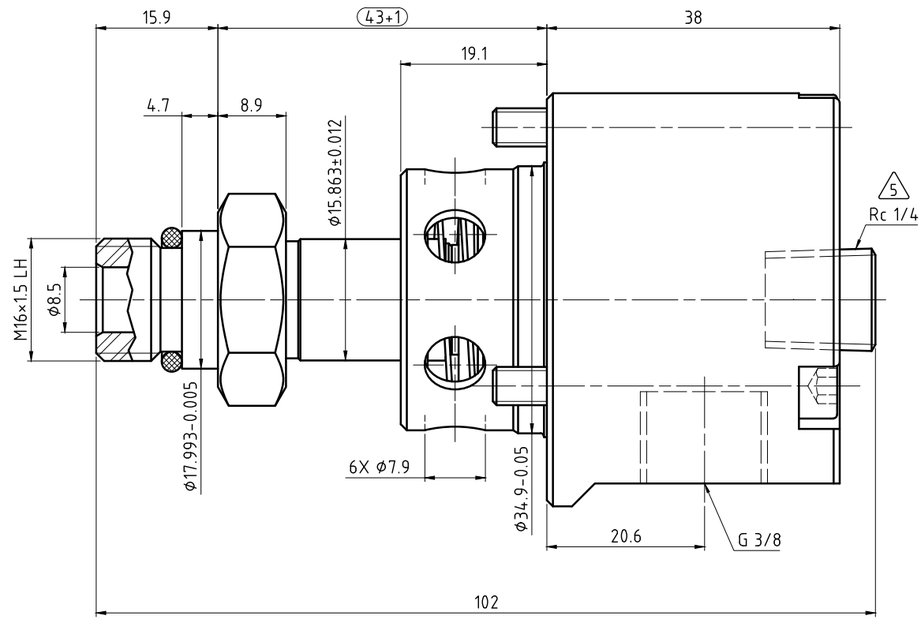

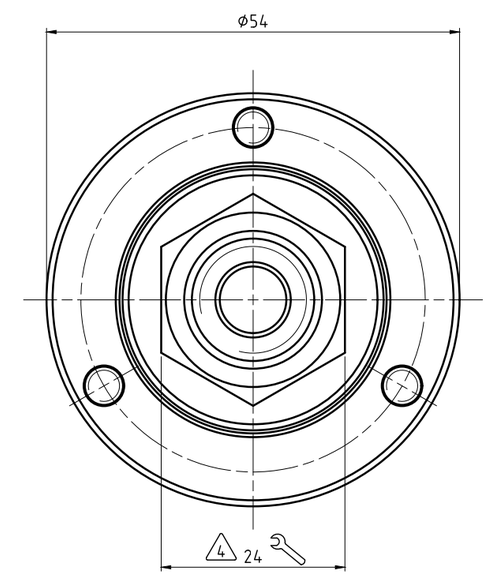

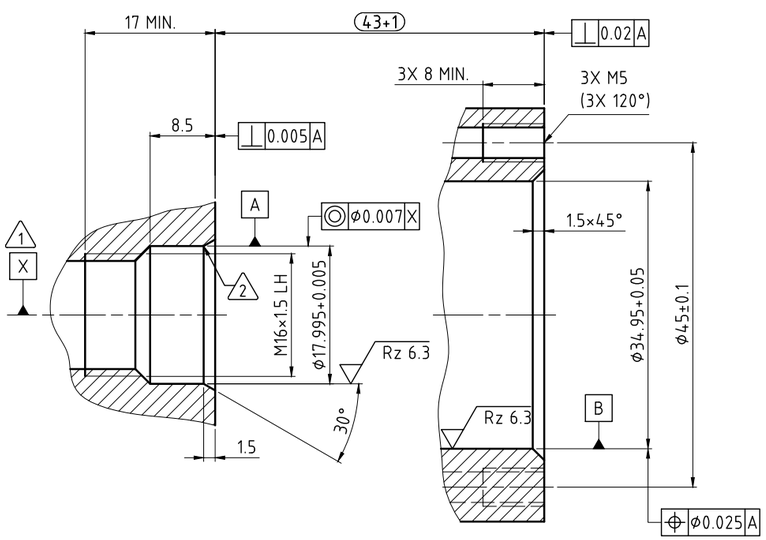

CUSTOMER INTERFACE

OPERATING DATA			
MEDIA		COOLANT	MQL
PRESSURE	MAXIMUM	140 bar	10 bar
	MINIMUM	-- bar	-- bar
MAXIMUM SPEED		30000 min^{-1}	30000 min^{-1}
FLOW RATE	MAXIMUM	24.3 l/min	595 Nl/min
	MINIMUM	-- l/min	-- Nl/min
TEMPERATURE	MAXIMUM	71 °C	71 °C
	MINIMUM	5 °C	5 °C
AXIAL FORCE		12.7 N/bar	
DRY RUN		UNLIMITED	

DEUBLIN® Engineered for Performance

PROJECTION:

SCALE: 2:1

MATERIAL: INTERFACE CONTROL DRAWING

	DATE	NAME
DRN.	09/24/14	N. Reyna
ENGR.	09/24/14	T. Wilson
APPD.		

UNLESS SPECIFICALLY TOLERANCED, ALL DIMENSIONS ARE CONSIDERED REFERENCE

ISSUE	MODIFICATION	ECO	DATE	SIGN

TITLE: DEUBLIN UNION

NO. 1129-037-301-IC

SHEET A2