CONFIDENTIAL
THIS DOCUMENT CONTAINS CONFIDENTIAL AND PROPRIETARY INFORMATION OF DEUBLIN COMPANY. COPYING, USE, TRANSMISSION, DISTRIBUTION, AND DISCLOSURE ARE SUBJECT TO THE TERMS AND CONDITIONS CONTAINED IN YOUR AGREEMENT WITH DEUBLIN COMPANY. ALL RIGHTS RESERVED.

NOTES:

1. SEAL MUST BE REPLACED WHEN "X" DIMENSION EXCEEDS 6.3 mm. CONTACT DEUBLIN FOR APPROPRIATE SERVICE KIT.
2. PLUG INSTALLED HAND TIGHT FROM FACTORY. IF PORT IS NOT UTILIZED, TIGHTEN BEFORE USE.

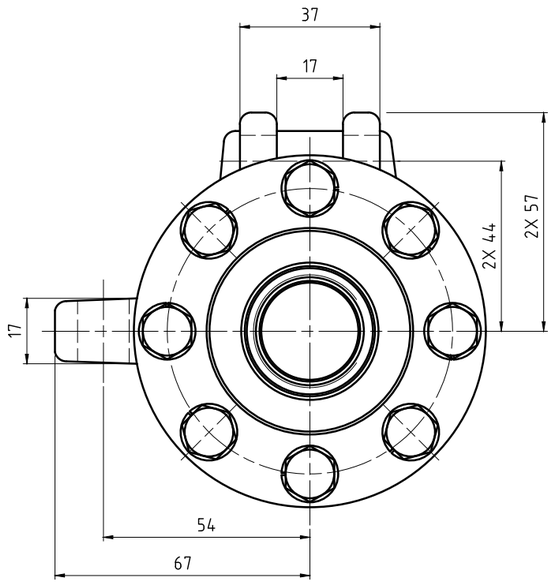

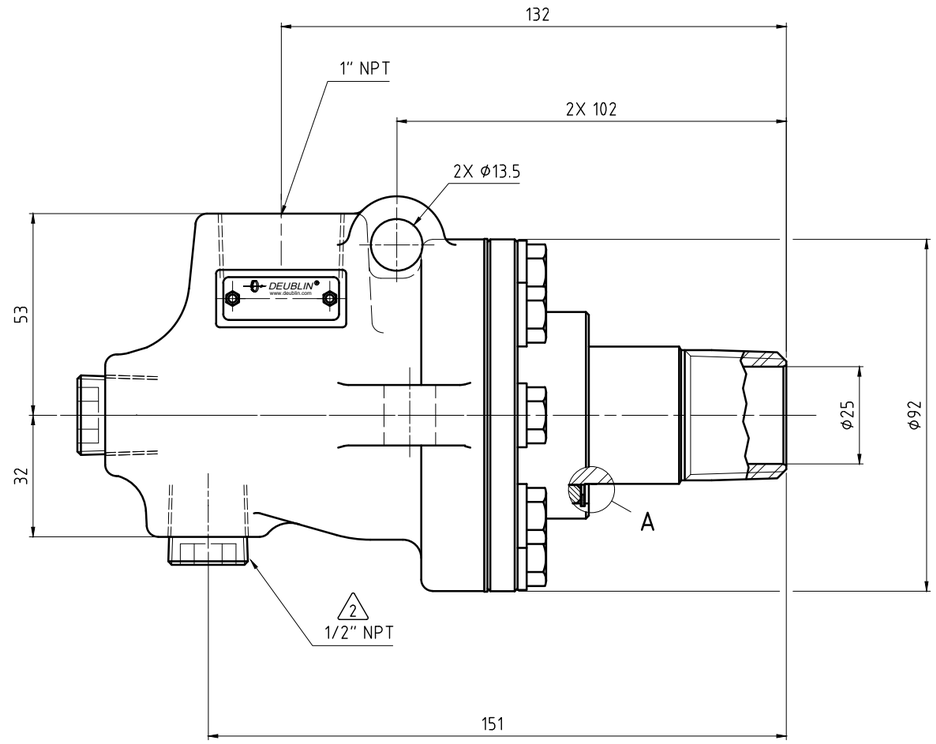

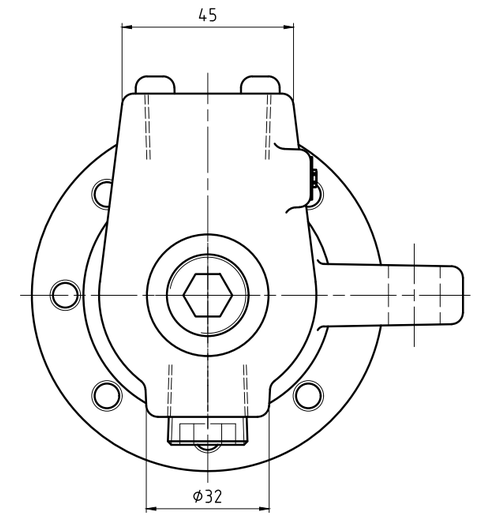

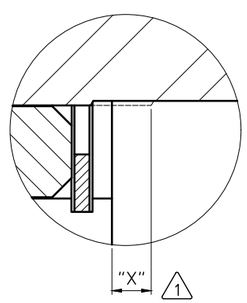

SEAL WEAR DETAIL

A (5:1)

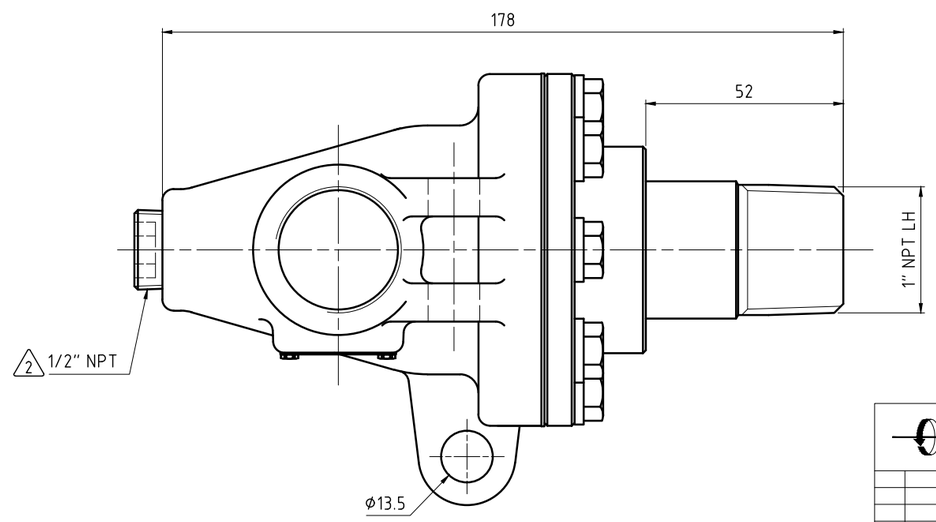

OPERATING DATA			
MEDIA		WATER	STEAM
PRESSURE	MAXIMUM	13.8 bar	8.6 bar
TEMPERATURE	MAXIMUM	178 °C	178 °C
SPEED	MAXIMUM	200 min^{-1}	200 min^{-1}
DRY RUN		NO	

DEUBLIN® Engineered for Performance

PROJECTION:

SCALE: 1:1

MATERIAL: INTERFACE CONTROL DRAWING

	DATE	NAME
DRN.	04/02/2014	lgalindo
ENGR.	04/XX/2014	L. Freed
APPD.		

TITLE: UNION TYPE C MONOFLOW BRONZE TRIM NPT PORTS 1" NPT LH ROTOR

UNLESS SPECIFICALLY TOLERANCED, ALL DIMENSIONS ARE CONSIDERED REFERENCE

NO. BC-54165-16-51

SHEET A2

ISSUE	MODIFICATION	ECO	DATE	SIGN