NOTES:
1 – WHEN ORDERING FROM DEUBLIN USE PART NUMBER: 9100–001–103.
2 – SEAL WEAR INDICATOR BECOMES VISIBLE WHEN SEAL IS WORN AND REPLACEMENT SHOULD BE SCHEDULED.

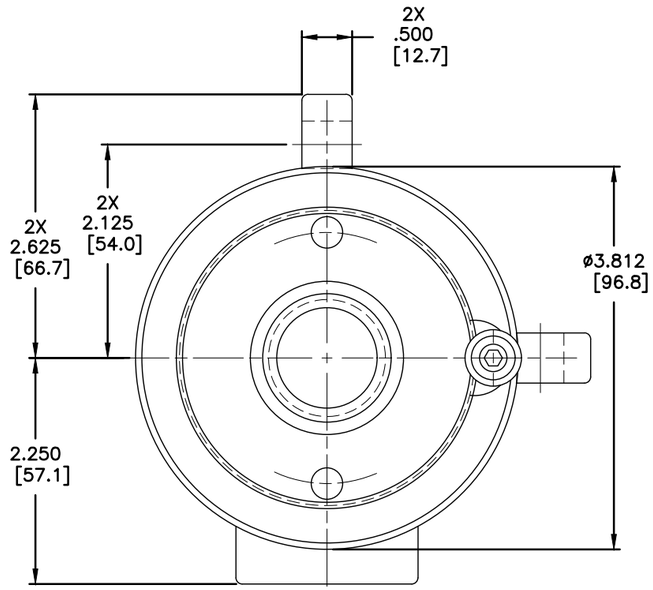

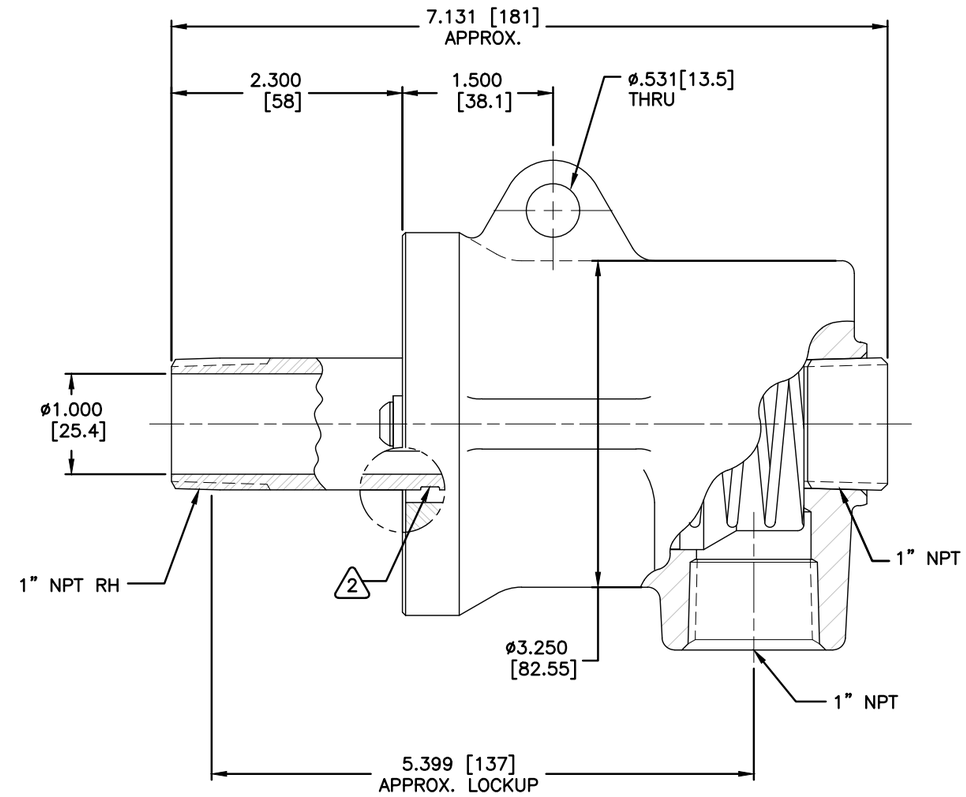

OPERATING CONDITIONS

STEAM SERVICE

150 P.S.I. (10 bar) MAX. PRESSURE
366°F (186°C) MAX. TEMPERATURE
400 R.P.M. MAX. SPEED

CONFIDENTIAL
THIS DOCUMENT CONTAINS PROPRIETARY INFORMATION AND IS NOT TO BE TRANSMITTED, REPRODUCED, USED OR DISCLOSED TO ANYONE WITHOUT THE WRITTEN PERMISSION OF THE DEUBLIN COMPANY.

LET.	REVISION	ECO	DATE	SIGN

EQUIPMENT REF:

ASSY/TEST FIXTURES REQUIRED:

SCALE	FULL	DWG SIZE	C
DRN	LG	10/18/06	
ENGR	TW	10/18/06	
APPD			

UNLESS OTHERWISE SPECIFIED TOLERANCES ±.010.
DIMENSIONS IN [ ] ARE IN MILLIMETERS.

DEUBLIN COMPANY
WAUKEGAN, ILLINOIS, U.S.A.

TITLE: INTERFACE CONTROL DRAWING FOR UNION 9100–001–103

NO. 9100–001–103–IC
C.A.D DRAWING