CONFIDENTIAL
THIS DOCUMENT CONTAINS CONFIDENTIAL AND PROPRIETARY INFORMATION OF DEUBLIN COMPANY. COPYING, USE, TRANSMISSION, DISTRIBUTION, AND DISCLOSURE ARE SUBJECT TO THE TERMS AND CONDITIONS CONTAINED IN YOUR AGREEMENT WITH DEUBLIN COMPANY. ALL RIGHTS RESERVED.

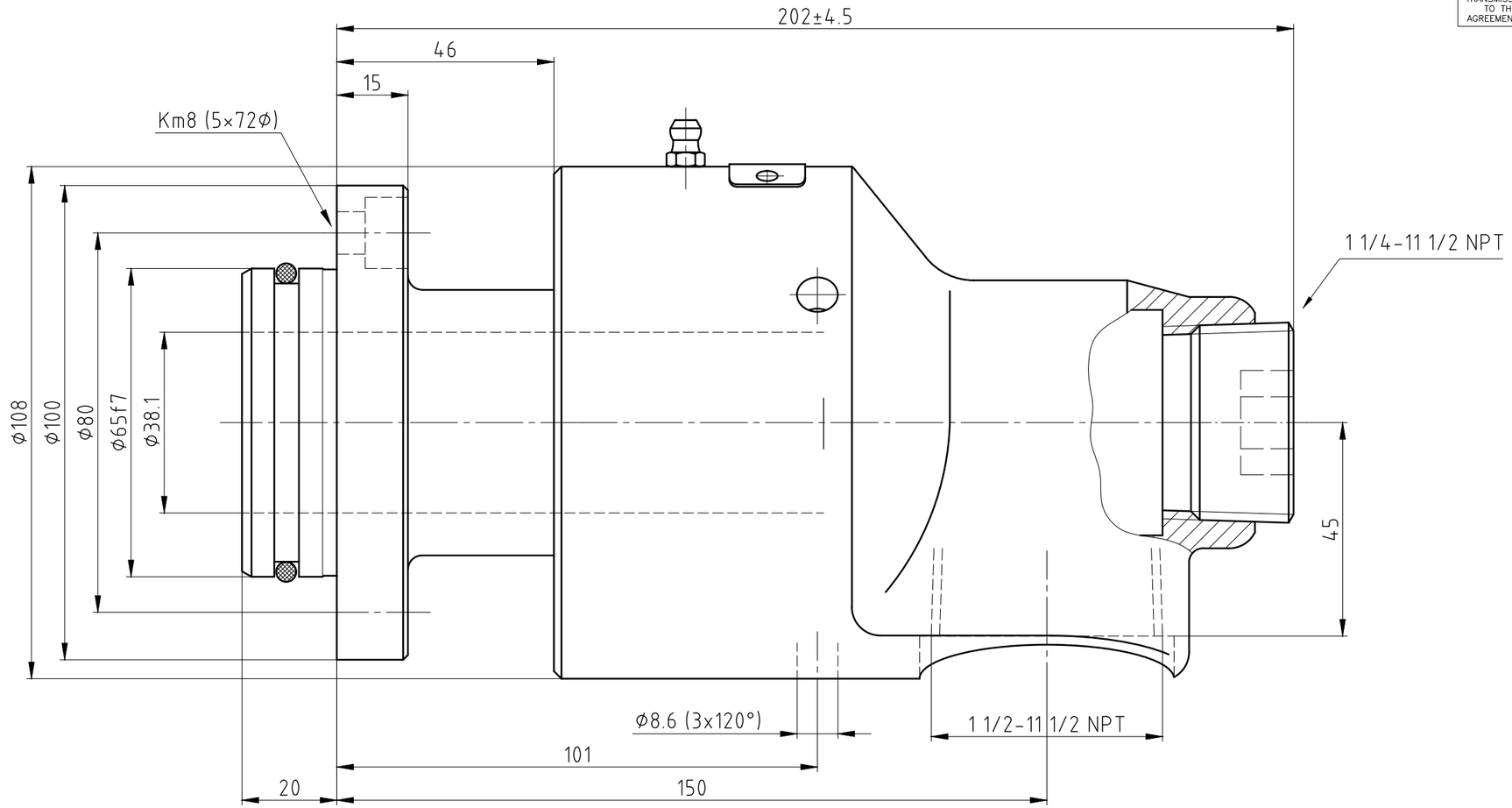

OPERATING DATA / Betriebsdaten

MEDIA Medium	WATER	Wasser
MAXIMUM PRESSURE Max. Druck	750 PSI *	50 bar *
MINIMUM OPERATING TEMPERATURE Min. Betriebstemperatur	· °F	· °C
MAXIMUM OPERATING TEMPERATURE Max. Betriebstemperatur	250 °F	120 °C ⓐ
MAXIMUM SPEED Max. Drehzahl	2500 RPM	2500 min^{-1}
FILTRATION Filterung	60 µm	60 µm
DRY RUN (WITHOUT ANY MEDIA) Trockenlauf (ohne Medium)	NO	nein

* PRESSURES EXCEEDING 115 PSI ONLY PERMISSABLE WITH COLD WATER (MAX. 120°F)!
Drücke über 8 bar nur in Verbindung mit Kaltwasser (max. 50°C) zulässig!

ISSUE	MODIFICATION	ECO	DATE	SIGN
a	Redrawn/Operat. Data	06034	21.02.06	Wolf

DEUBLIN GmbH
D-65719 HOFHEIM-WALLAU, GERMANY

PROJECTION:

	DATE	NAME
DRN.	21.02.2006	C. Wolf
ENGR.	21.02.2006	H.J. Huhn
APPD.		

UNLESS SPECIFICALLY TOLERANCED, ALL DIMENSIONS ARE CONSIDERED REFERENCE

SCALE: 1:1 z:\unions\
MATERIAL:
TITLE: DEUBLIN ROTATING UNION
DEUBLIN Drehdurchführung
NO. 555-000-765-DD
SHEET A3