CONFIDENTIAL
The reproduction, distribution and utilization of this document as well as the communication of its contents to others without express authorization is prohibited. Offenders will be held liable for the payment of damages. All rights reserved in the event of the grant of a patent, utility model or design.

NOTES:

1. CONTACT DEUBLIN OR VISIT WWW.DEUBLIN.COM FOR INSTRUCTION MANUAL: 040-550
2. PIPE SUPPLIED BY CUSTOMER.
3. PIPE LENGTH.
4. GASKET THICKNESS.
5. FITTING TO BE ASSEMBLED HAND-TIGHT, OR MAY BE SHIPPED UNASSEMBLED.

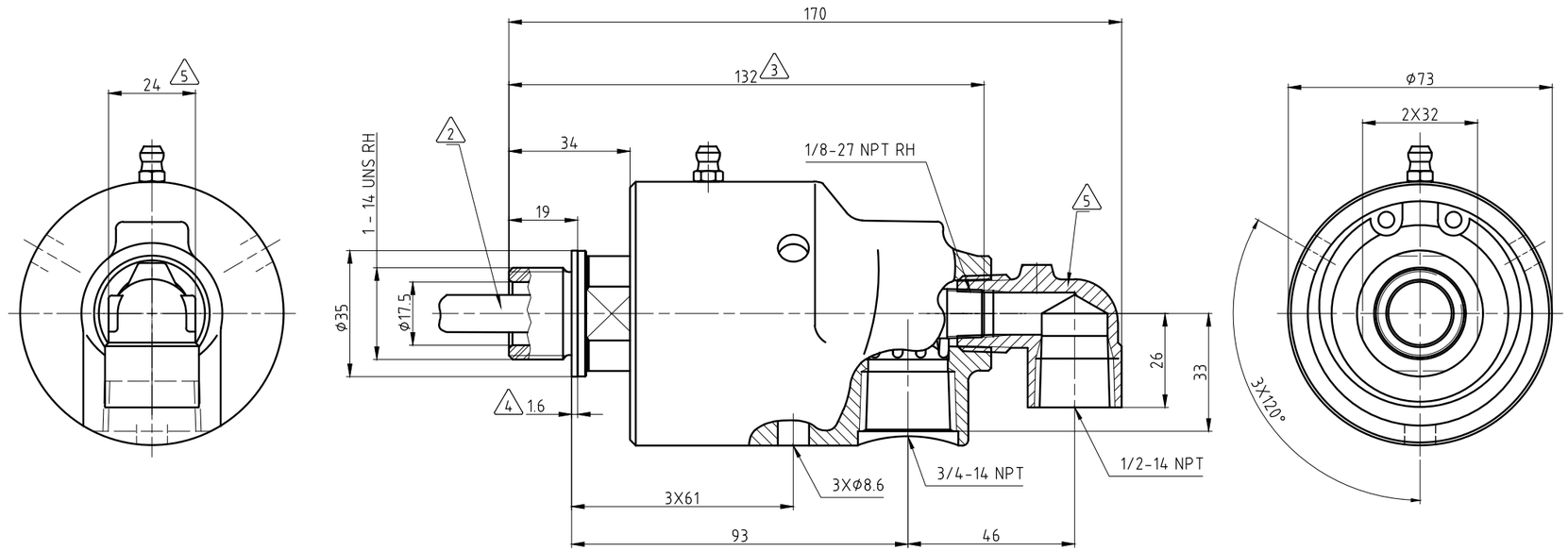

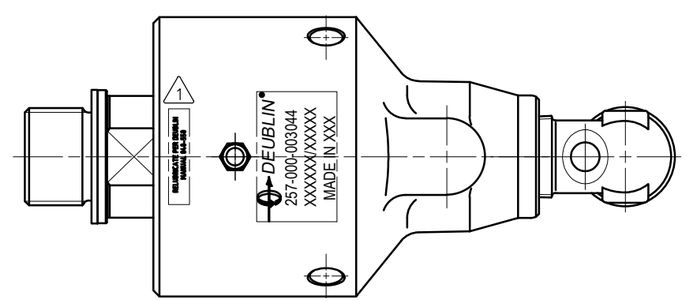

OPERATING DATA			
MEDIA	WATER	SATURATED STEAM (INTERMITTENT)	THERMAL OIL
PRESSURE MAX.	50 bar	1 bar	6.6 bar
SPEED MAX.	3500 min^{-1}		
TEMPERATURE MAX.	121 °C		
DRY RUN (WITHOUT ANY MEDIA)	NO		
RECOMMENDED FILTRATION	60 micron		

DEUBLIN
HOERBIGER Rotary Solutions

PROJECTION:

SCALE: 1:1

MATERIAL: INTERFACE CONTROL DRAWING

	DATE	NAME
DRN.	18.06.2021	MZe
ENGR.	18.06.2021	RMkia
APPD.		

ISSUE	MODIFICATION	ECO	DATE	SIGN
A	SEE ECO	60724	06/21	MZe

UNLESS SPECIFICALLY TOLERANCED, ALL DIMENSIONS ARE CONSIDERED REFERENCE

TITLE: DEUBLIN ROTATING UNION
DEUBLIN Drehdurchführung

NO. 257-000-003044

SHEET A2